TEKNOBILI KITCHEN
FL96127CR

NOBILI®
The Best Technology for Water

Image

Technical drawing

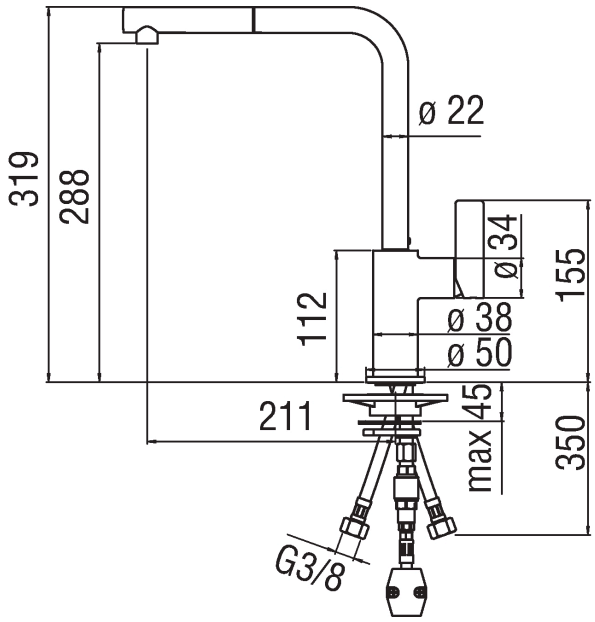

Specifications

FLAG
Single control
Chrome Finish
Swivel spout
Pull-out single jet hand shower
Cartridge ø 28 mm
Dynamic flow limiter (-50%)
The temperature limiter
Flexible Parigi® SPX® stainless steel ø 3/8"
Packaging: 56,5 x 29 x 7,1 cm / 0,011633 m' / 2,16 kg

BELGAQUA