NEW ROAD
RD00113/25CR

NOBILI®
The Best Technology for Water

Image

Technical drawing

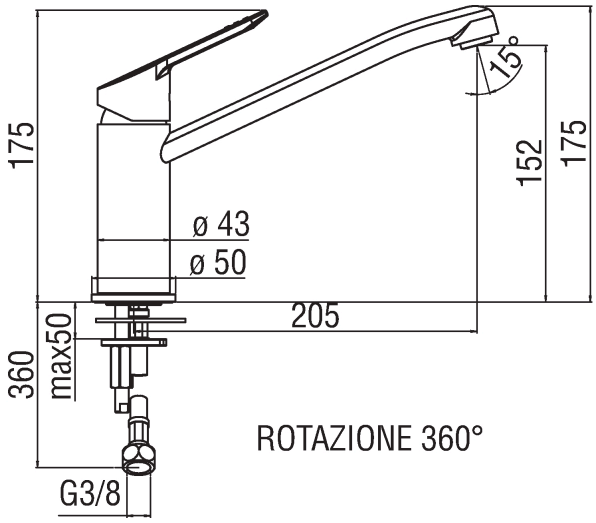

Specifications

Sink
Single control
Chrome Finish
360° swivel body
Cartridge ø 28 mm
Dynamic flow limiter (-50%)
The temperature limiter
Aerator Neoperl® plastic M 24
Flexible Parigi® SPX® stainless steel ø 3/8"
Packaging: 41 x 21 x 7 cm / 0,006027 m' / 1,556 kg
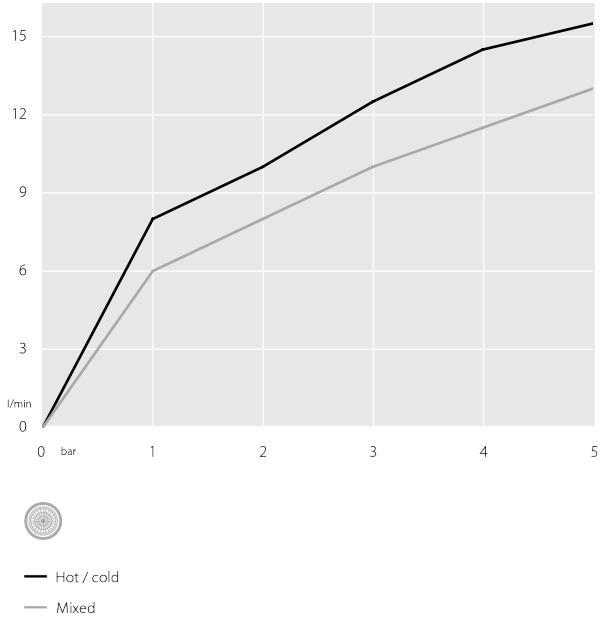
Flow rate diagram