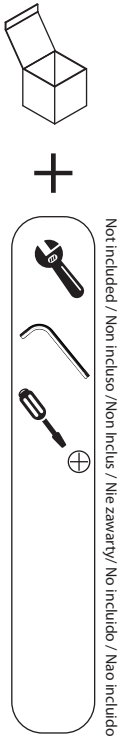
Not included / Non incluso /Non Inclus / Nie zawarty/ No incluido / Nao incluido

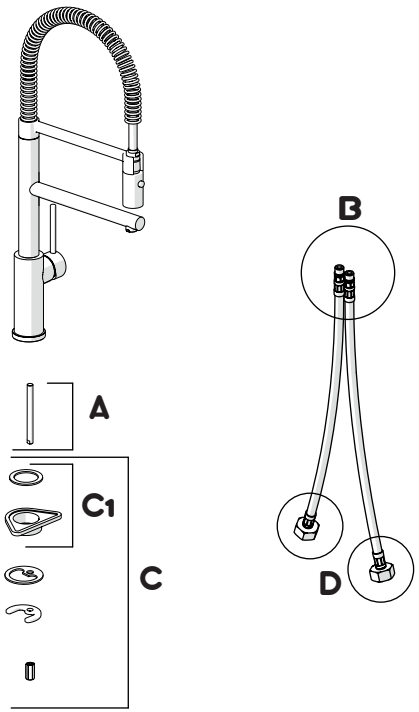
1
A
C1
C
B
D

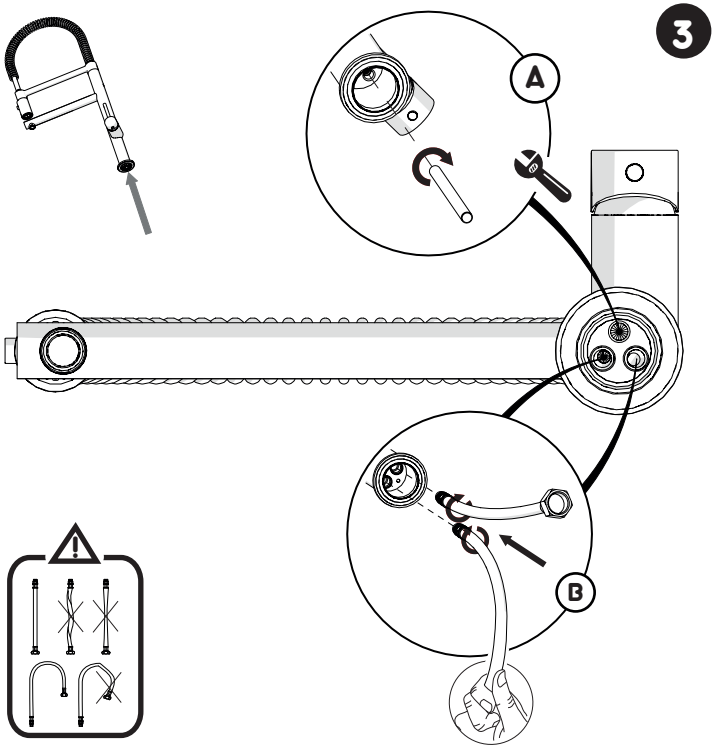
3
A
B

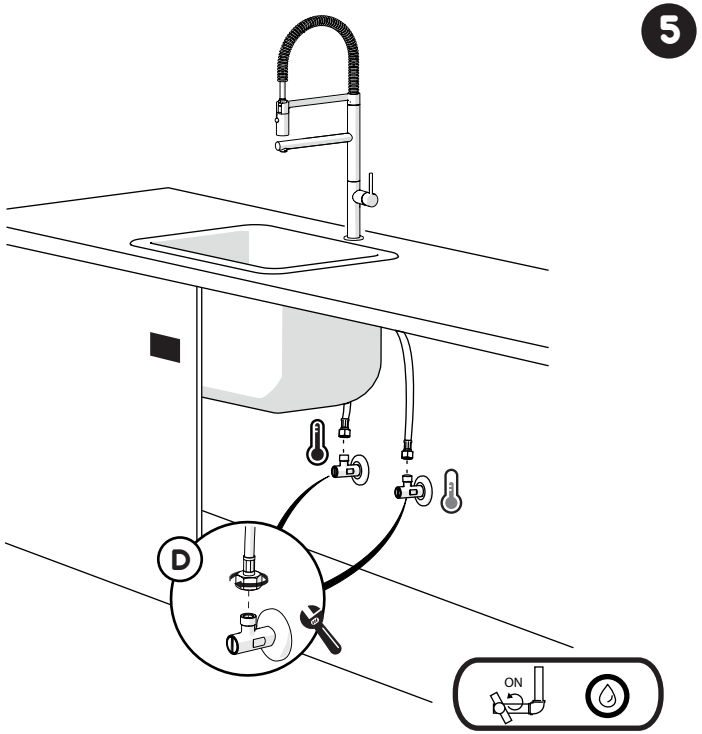
5
D
ON

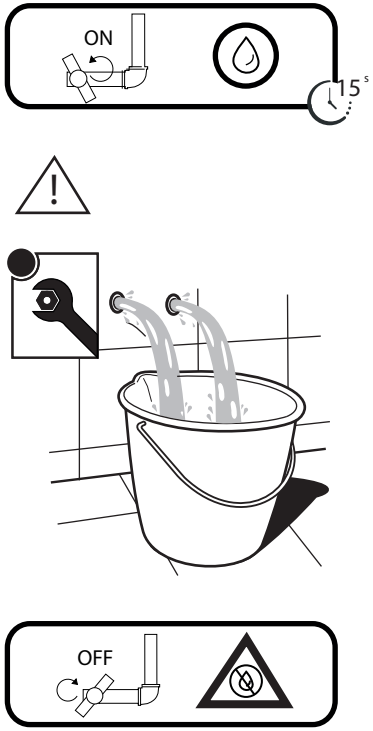
2
ON
15 s
OFF

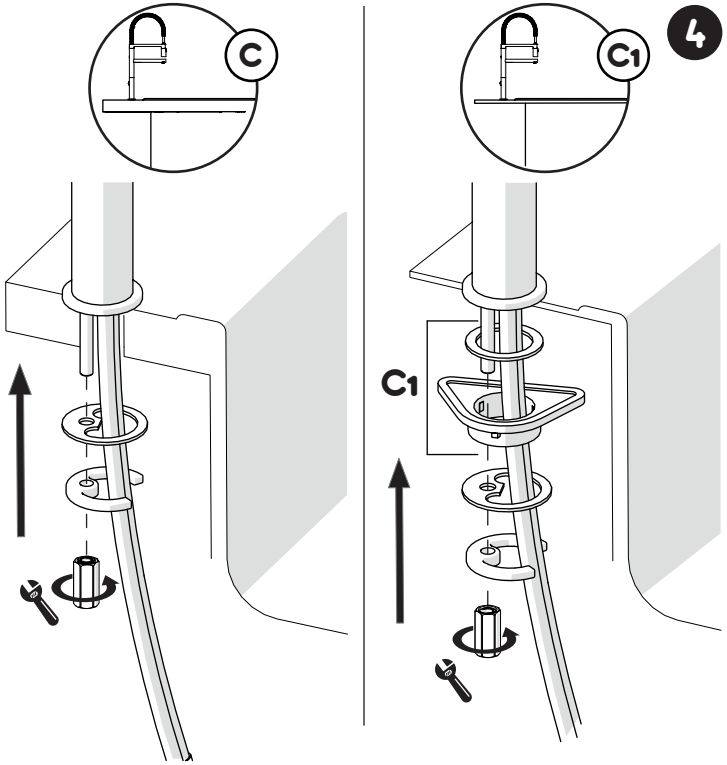
4
C
C1
C1

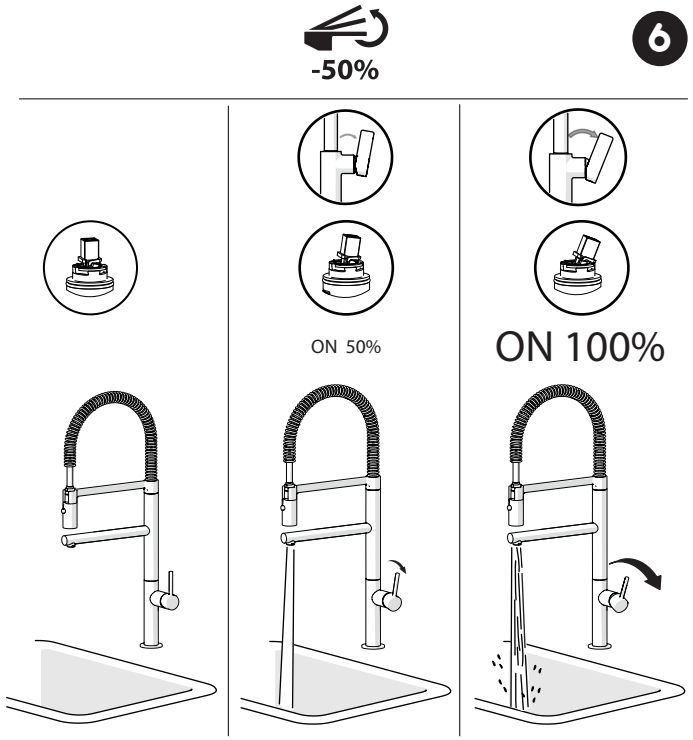
6
-50%
ON 50%
ON 100%

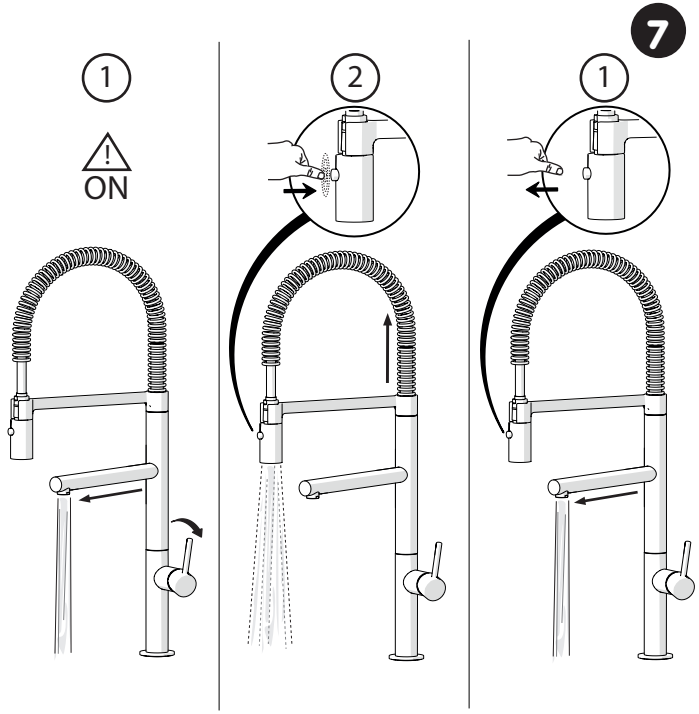

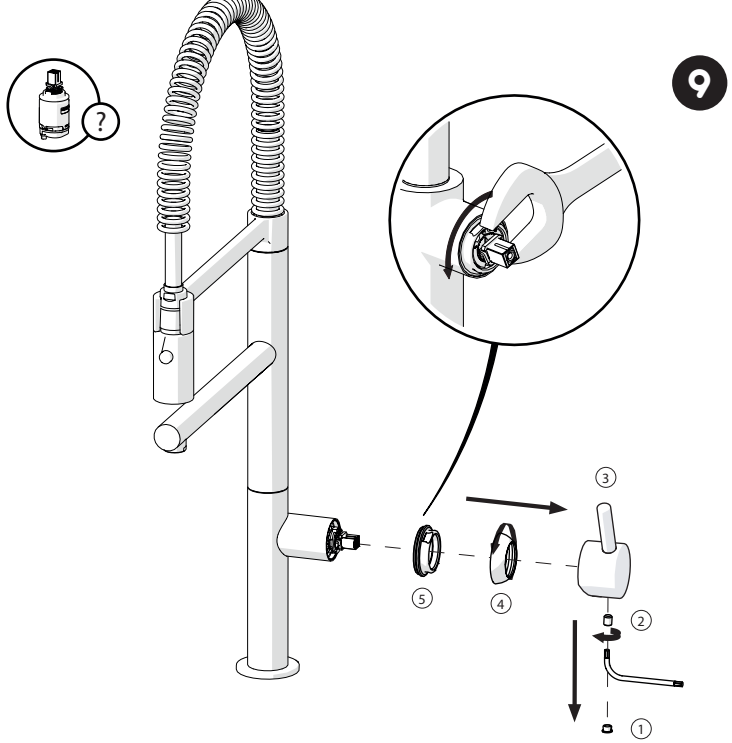

NOBILI®

The Best Technology for Water

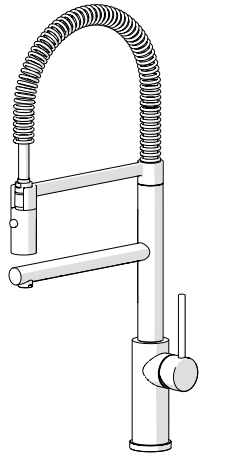

WB00300_50

www.grupponobili.it

IISTRWB00300/50#---STD
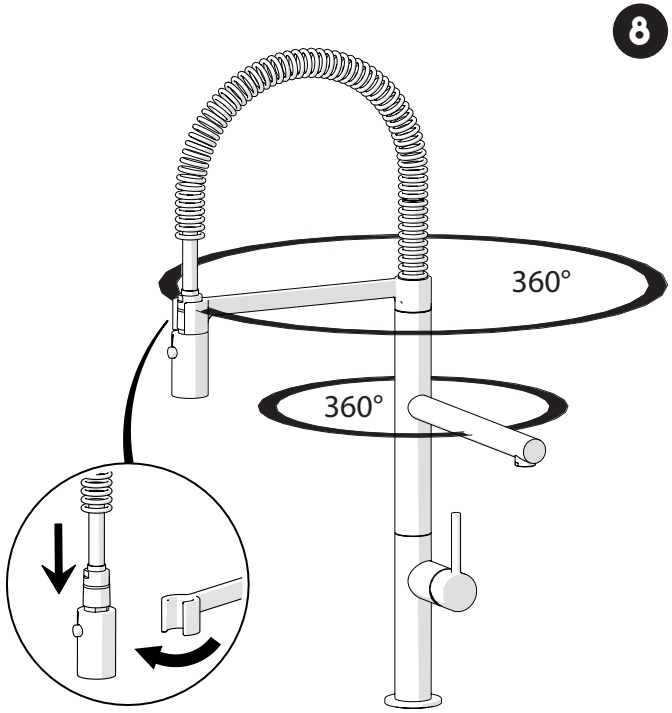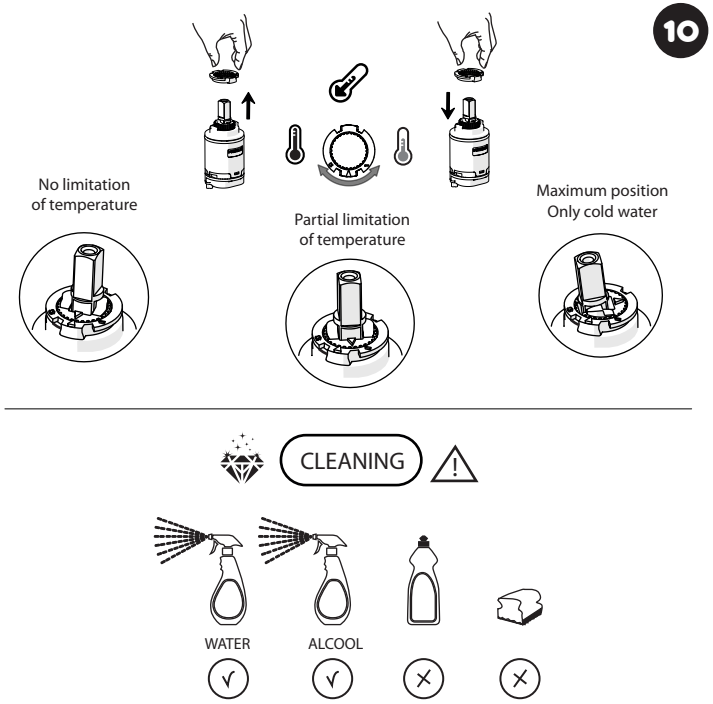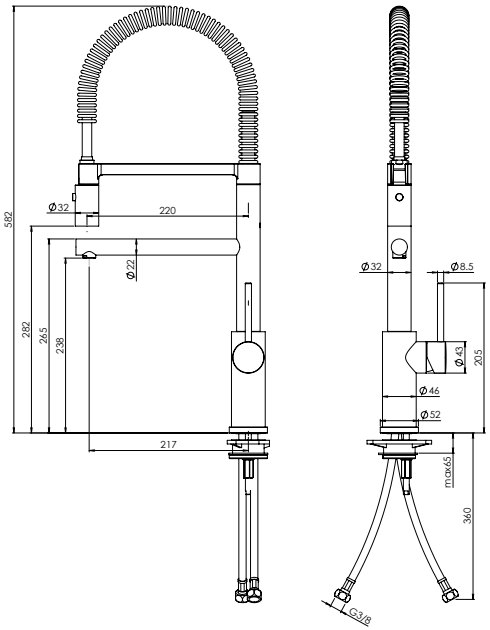
REV04/2013